# MINI SLIDE (2-WAY) SCRW2

LOAD CAPACITY 137~177 N/pair | L=R | 2-WAYS

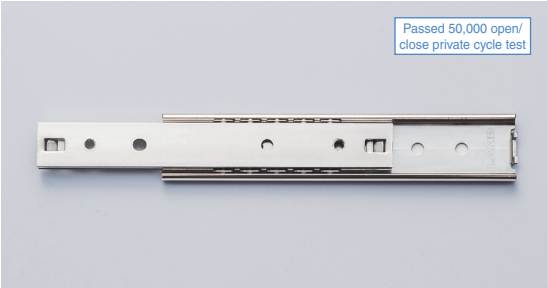


- 3/4 extension (2 members).
- Only 15.5mm in height with small deflection, suitable for various places.

**[Remarks]**
- Types with slide length 80mm have no holes marked with ※.
- Install stopper separately to protect rails and retainers from strong shock.

**[Recommended Screws]**
- M2.6 low head screw (for outer member)
- M2.6 screw (for inner member) Screw length = Panel thickness + Max. 1.5 mm

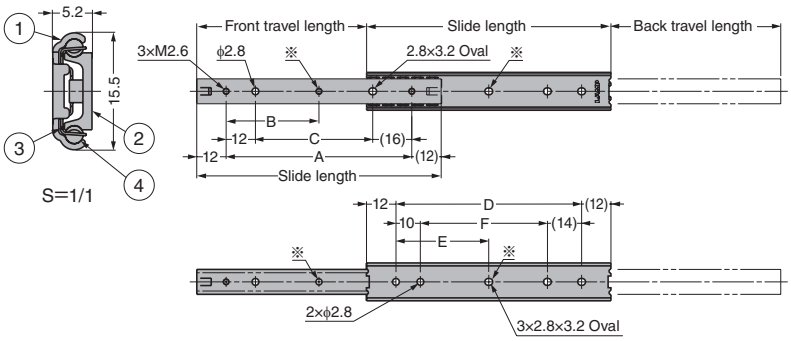


| No. | Part Name | Material |
|---|---|---|
| ① | Outer Member | Stainless Steel (SUS304) |
| ② | Inner Member | |
| ③ | Retainer | |
| ④ | Balls | Steel (SUJ) |

Sold by piece.

| RoHS | CAD | Item Code | Item Name | Slide Length | Travel Length Front | Travel Length Back | A | B | C | D | E | F | Vertical Installation Load Capacity N/pair | Vertical Installation Load Capacity kgf/pair | Weight (g/pc) | Box (pcs) | Carton (pcs) |
|---|---|---|---|---|---|---|---|---|---|---|---|---|---|---|---|---|---|
| G | 3D | 190-026-620 | SCRW2-15-80A | 80 | 48.5 | 48.5 | 56 | – | 28 | 56 | – | 32 | 137 | 14 | 21 | 200 | 400 |
| G | 3D | 190-026-621 | SCRW2-15-100A | 100 | 68.5 | 68.5 | 76 | 38 | 48 | 76 | 38 | 52 | 157 | 16 | 26 | 200 | 400 |
| G | 3D | 190-026-622 | SCRW2-15-150A | 150 | 94.5 | 94.5 | 126 | 63 | 98 | 126 | 63 | 102 | 177 | 18 | 41 | 100 | 200 |

# ALL STAINLESS STEEL MINI SLIDE (2-WAY) SCRW2-15S

LOAD CAPACITY 137~177 N/pair | L=R | 2-WAYS | SUS

- 3/4 extension (2 members).
- Only 15.5mm in height with small deflection, suitable for various places.
- Grease (NSF H1 Registered Food Grade Lubricants) for food machinery is used.

**[Remarks]**
- Types with slide length 80mm have no holes marked with ※.
- Install stopper separately to protect rails and retainers from strong shock.

**[Recommended Screws]**
- M2.6 low head screw (for outer member)
- M2.6 screw (for inner member) Screw length = Panel thickness + Max. 1.5 mm

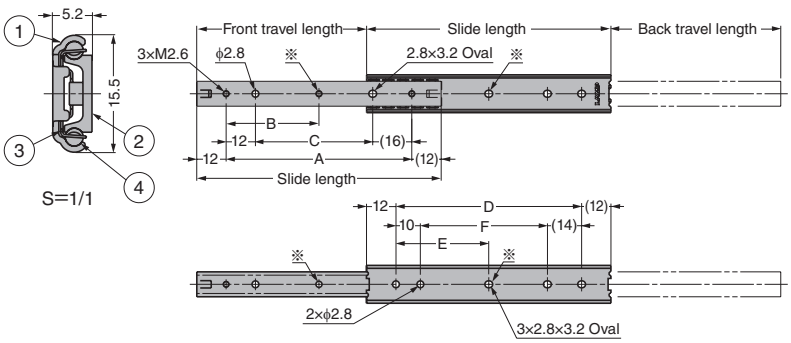


| No. | Part Name | Material |
|---|---|---|
| ① | Outer Member | Stainless Steel (SUS304) |
| ② | Inner Member | |
| ③ | Retainer | |
| ④ | Balls | Stainless Steel (SUS440) |

Sold by piece.

| RoHS | CAD | Item Code | Item Name | Slide Length | Travel Length Front | Travel Length Back | A | B | C | D | E | F | Vertical Installation Load Capacity N/pair | Vertical Installation Load Capacity kgf/pair | Weight (g/pc) | Box (pcs) | Carton (pcs) |
|---|---|---|---|---|---|---|---|---|---|---|---|---|---|---|---|---|---|
| G | 3D | 190-034-806 | SCRW2-15S-80A | 80 | 48.5 | 48.5 | 56 | – | 28 | 56 | – | 32 | 137 | 14 | 21 | – | – |
| G | 3D | 190-034-807 | SCRW2-15S-100A | 100 | 68.5 | 68.5 | 76 | 38 | 48 | 76 | 38 | 52 | 157 | 16 | 26 | – | – |
| G | 3D | 190-034-808 | SCRW2-15S-150A | 150 | 94.5 | 94.5 | 126 | 63 | 98 | 126 | 63 | 102 | 177 | 18 | 41 | – | – |